Montana 9-1-1 Advisory Council

Next Generation 911

03/12/2020

CenturyLink Account Team

Jon Osborn
Account Director

Lisa Kelly
Account Manager

Kevin Newton
Sales Engineer

Agenda:

- Intro
- NG911 Transition Methodology
- Montana ESInet
- NG9-1-1 Core Services
- Montana NGCS Design
- NGCS Benefits
- Q&A

CenturyLink Next-Gen 9-1-1 Solution Transformation Methodology

All conversations are driven by customer requirements. There is no "one size fits all"

Discover

What does the customer need?

How do customer needs align with CTL capabilities?

Identify key stakeholders

Design

Innovative

Flexible

Secure

Building blocks

Future-proof

Build

Experienced

Process-driven

Collaborative

Manage

Tier 1 network

24x7 NOC

Security

Responsiveness

Upgrades

Ecosystem Thinking

Customer-centric | Collaborative | Innovative | Flexible | Engages all stakeholders

CenturyLink

E911 Network Overlay on Vision Net MPLS Core

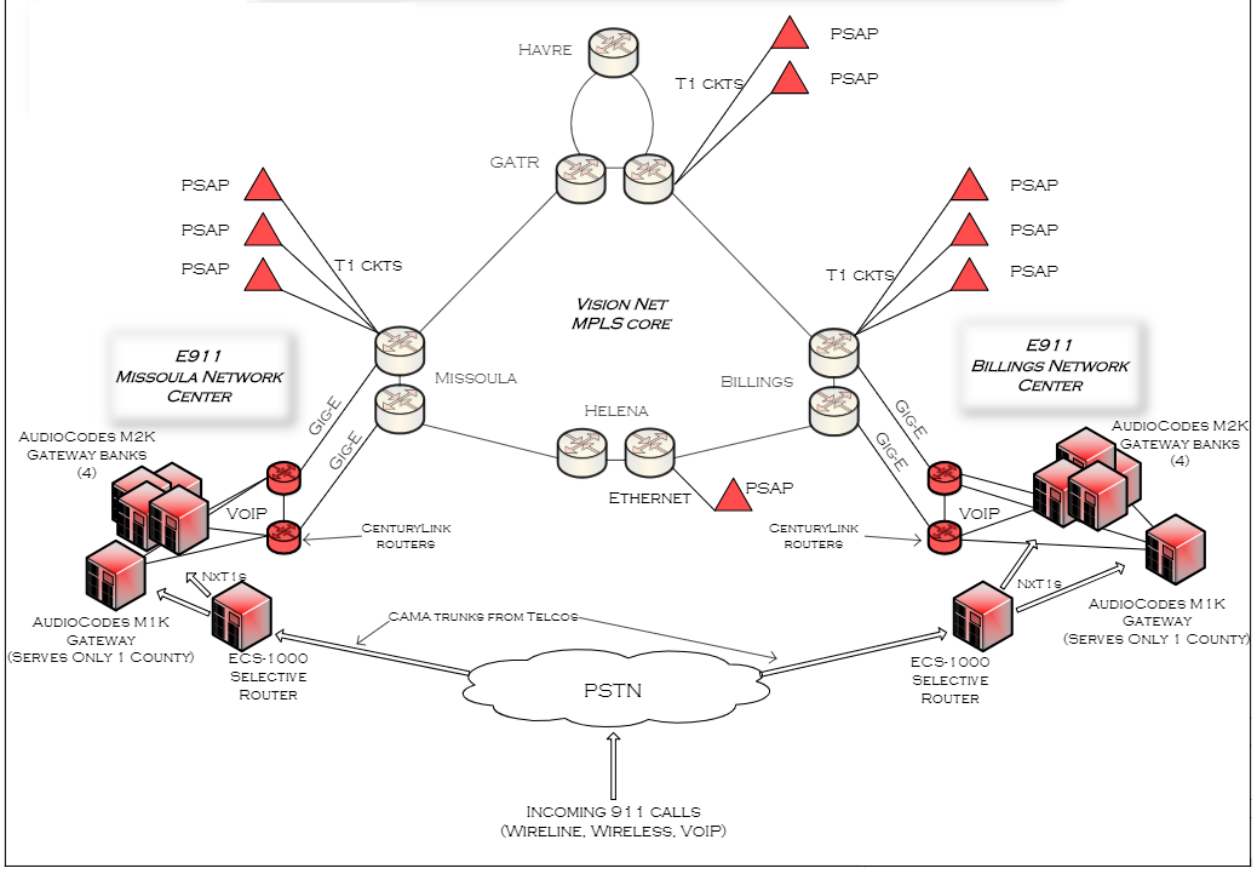

NG9-1-1 ESInet Service (“Service”) has 5 components:

1. **Aggregation** of OSP Calls and ingress to ESInet (CTL)
2. **IP Transport** for egress from ESInet to Authorities, accommodating all forms of 9-1-1 requests for service (e.g. calls, texts, etc.)
3. **Legacy PSAP Gateway (LPG)** for egress to CPE requiring CAMA

---

4. **Routing** of SIP-based, NG9-1-1 Calls for Service

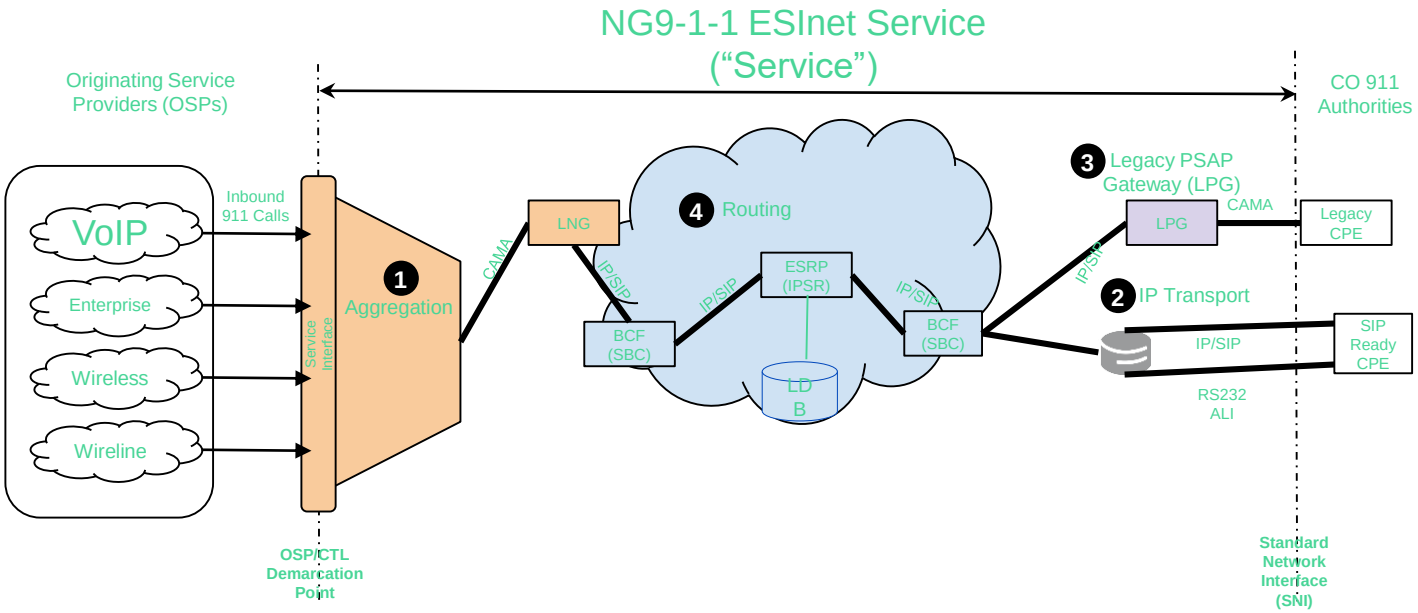

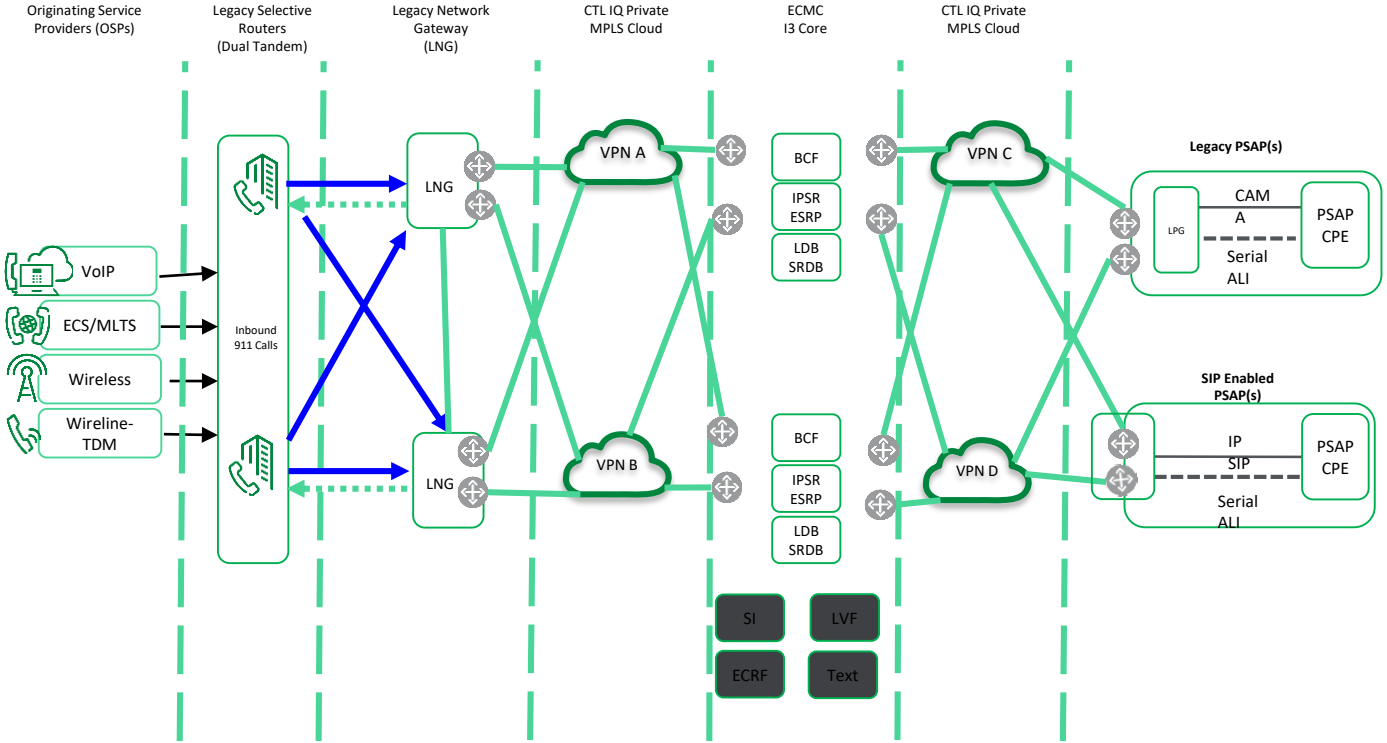

Notes & Legend

Ingress to ECMC

Transfer Trunks

Next Generation Core Services

ECMC and IPSR

- Geographically diverse
- Contains the defined NG9-1-1 Core Services (NGCS)
- Extremely scalable
- Supported by a network architecture that allows for seamless adjustment of the circuit capacity
- Designed to support 11,000 concurrent SIP sessions
- Expandable to 250,000 concurrent sessions without hardware augmentation
- NGCS includes BCF, ESRP/PRF, & ECRF/LVR
- Handles text, multimedia, and TTY
- Provides location elements e.g. LIS/LDB
- Built according to end-state architectural specifications described in NENA STA-010.2-2016
- Individual PSAP migration dates

CenturyLink®

The Benefits of NG911

"An IP based system that Allows information to flow seamlessly across the system from the public to first responders."

- Increased Reliability of 911 Networks
- Increased Public Access *(i.e., texting, data, photos, and videos)*
- Transfer of 9-1-1 Calls Between Geographically Dispersed PSAPs
- Data sharing between PSAPs
- Improved redundancy and reliability (virtual PSAPs)
- True system interoperability
- Improved response times
- Enhanced disaster response
- Eliminates call routing issues when receiving an influx of calls

CenturyLink®

Thank you!

Q&A

03/12/2020